TOP LINE
PROCESS EQUIPMENT COMPANY

Tube O.D. Butt Weld Fittings

Stainless Steel Flow Control Equipment for the

Food, Beverage, Dairy, Cosmetics, Biotechnology,

Pharmaceutical and Electronics Processing Industries

Tube O.D. Butt Weld Fittings

Top Line has been supplying high quality stainless steel products to the dairy, food, beverage, pharmaceutical and other process industries for over twenty-five years. Our commitment to fine craftsmanship, responsible service and realistic pricing has led to our company's successive years of growth.

Top Line specializes in stainless steel materials–types 304, 316 and "L grades". Our modern, well equipped manufacturing facilities are staffed by skilled and dedicated craftsmen. Consistently meeting important tolerances and finish specification is of primary concern to us. Before any products leave our plant they are subjected to rigid quality assurance checks.

Top Line should always be considered your first choice for both standard and custom fabricated stainless steel products.

Butt Weld Fittings Specifications

Size Range:	1" OD through 6" OD
Materials:	304 (Stock No. Prefix 35)
	316L (Stock No. Prefix 39)
Finish:	No. 1 – unpolished (special)

Ordering Specifications

Specify:

- Quantity
- Size
- Product Description
- Stock Number
- Material Type
- Polish Requirements

Example

Quantity	Size	Product Description	Stock Number	Material Type	Polish
⇩	⇩	⇩	⇩	⇩	⇩
3 Each	2"	2WCL	#3530120	Type 304	No. 7

LIMITED WARRANTY

Top Line Process Equipment Company products are warranted to be free of defects in material or workmanship for a period of one year from date of shipment. Warranty covers those Top Line products used in an approved installation and maintained in strict accordance with recognized standard industry practice. If, after properly authorized return, Top Line determines that products are defective, Top Line may at its option, repair or replace such defective products.

Top Line shall not be liable for consequential, indirect or incidental damages. The above warranty is in lieu of all other warranties, expressed or implied.

*Styles and dimensions are subject to change without notice.

2WCL–L.R. 90° ELL

SIZE (TUBE O.D.)	O.D.	I.D.	T	A	STOCK NO.
3/4	0.750	0.620	.065	1-1/8	3530107V
1	1.000	.870	.065	1-1/2	3530110
1-1/2	1.500	1.370	.065	2-1/4	3530115
2	2.000	1.870	.065	3	3530120
2-1/2	2.500	2.370	.065	3-3/4	3530125
3	3.000	2.870	.065	4-1/2	3530130
4	4.000	3.834	.083	6	3530140
6	6.000	5.782	.109	9	3530160

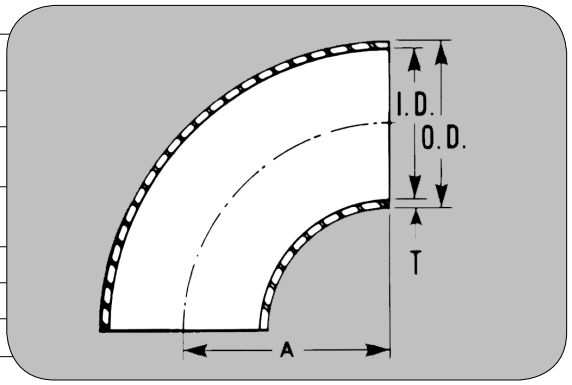

2WCL–L.R. 45° ELL

SIZE (TUBE O.D.)	O.D.	I.D.	T	B	STOCK NO.
1	1.000	.870	.065	5/8	3530310
1-1/2	1.500	1.370	.065	15/16	3530315
2	2.000	1.870	.065	1-1/4	3530320
2-1/2	2.500	2.370	.065	1-9/16	3530325
3	3.000	2.870	.065	1-7/8	3530330
4	4.000	3.834	.083	2-1/2	3530340
6	6.000	5.782	.109	3-3/4	3530360

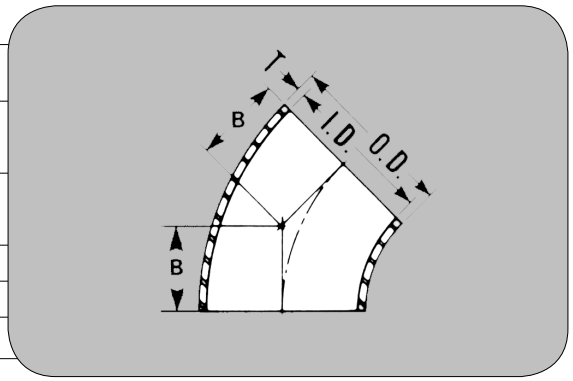

7W TEE

SIZE (TUBE O.D.)	O.D.	I.D.	T	C	STOCK NO.
1	1.000	.870	.065	1-7/8	3530610
1-1/2	1.500	1.370	.065	2-1/4	3530615
2	2.000	1.870	.065	3	3530620
2-1/2	2.500	2.370	.065	3	3530625
3	3.000	2.870	.065	3-1/4	3530630
4	4.000	3.834	.083	3-7/8	3530640
6	6.000	5.782	.109	5	3530660

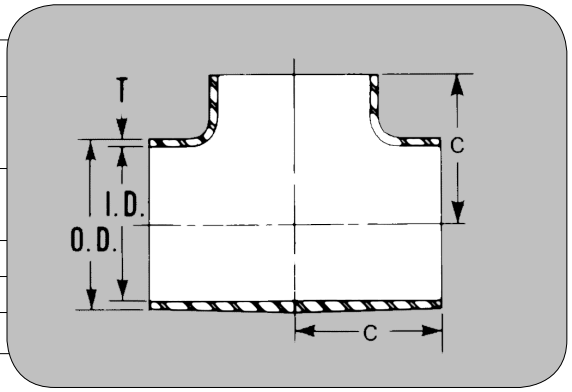

7WR REDUCING TEE

SIZE (TUBE O.D.)	A	B	STOCK NO.
1-1/2 X 1	2-1/4	2-1/8	3530515R10
2 X 1	3	2-3/8	3530520R10
2 X 1-1/2	3	2-1/2	3530520R15
2-1/2 X 1	3	2-3/4	3530525R10
2-1/2 X 1-1/2	3	2-3/4	3530525R15
2-1/2 X 2	3	3-1/4	3530525R20
3 X 1	3-1/4	3	3530530R10
3 X 1-1/2	3-1/4	3	3530530R15
3 X 2	3-1/4	3-1/2	3530530R20
3 X 2-1/2	3-1/4	3-1/4	3530530R25
4 X 1	3-7/8	4	3530540R10
4 X 1-1/2	3-7/8	4	3530540R10
4 X 2	3-7/8	4	3530540R15
4 X 2-1/2	3-7/8	3-3/4	3530540R25
4 X 3	3-7/8	3-3/4	3530540R30
6 X 3	5	4-3/4	3530560R30
6 X 4	5	4-7/8	3530560R40

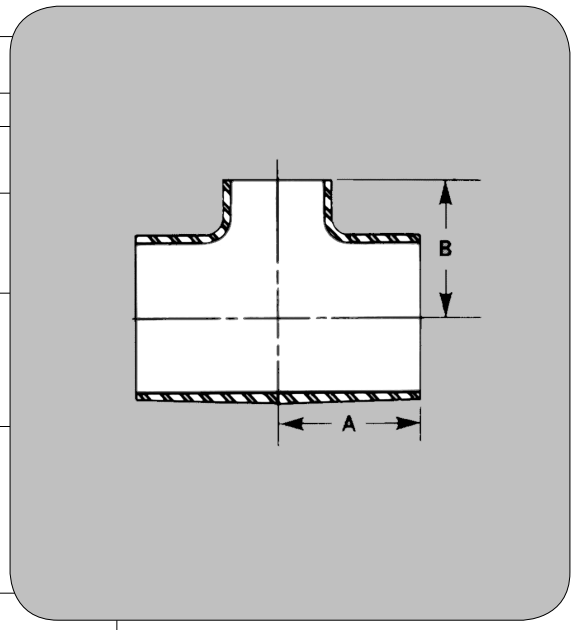

9W CROSS

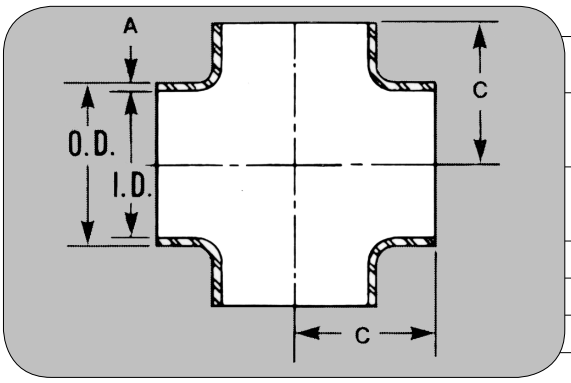

SIZE (TUBE O.D.)	O.D.	I.D.	A	C	STOCK NO.
1	1.000	.870	.065	1-7/8	3530410
1-1/2	1.500	1.370	.065	2-1/4	3530415
2	2.000	1.870	.065	3	3530420
2-1/2	2.500	2.370	.065	3	3530425
3	3.000	2.870	.065	3-1/4	3530430
4	4.000	3.834	.083	3-7/8	3530440
6	6.000	5.782	.109	5	3530460

16W CAP

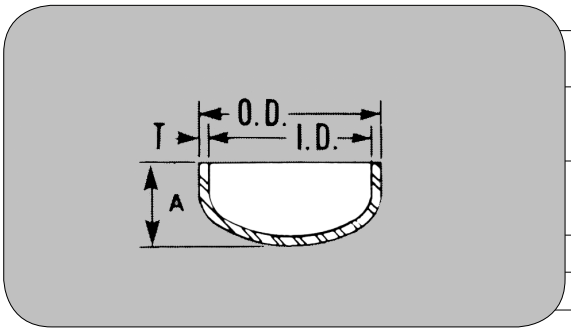

SIZE (TUBE O.D.)	O.D.	I.D.	A	C	STOCK NO.
1	1.000	.870	.065	3/8	3531610
1-1/2	1.500	1.370	.065	9/16	3531615
2	2.000	1.870	.065	3/4	3531620
2-1/2	2.500	2.370	.065	1	3531625
3	3.000	2.870	.065	1-1/4	3531630
4	4.000	3.834	.083	1-1/2	3531640

19W ADAPTER

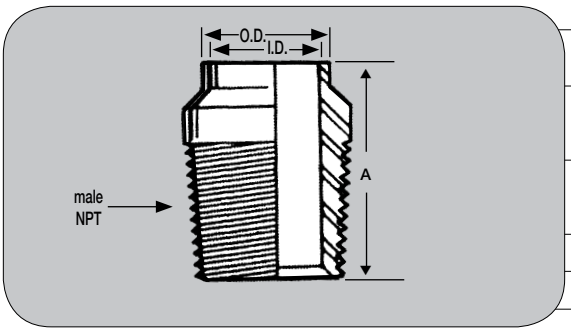

SIZE (TUBE O.D.)	O.D.	I.D.	A	STOCK NO.
1	1.000	.870	1-3/4	3531910
1-1/2	1.500	1.370	1-3/4	3531915
2	2.000	1.870	1-13/16	3531920
2-1/2	2.500	2.370	2-5/16	3531925
3	3.000	2.870	2-1/2	3531930
4	4.000	3.834	2-9/16	3531940

14VB STUB END

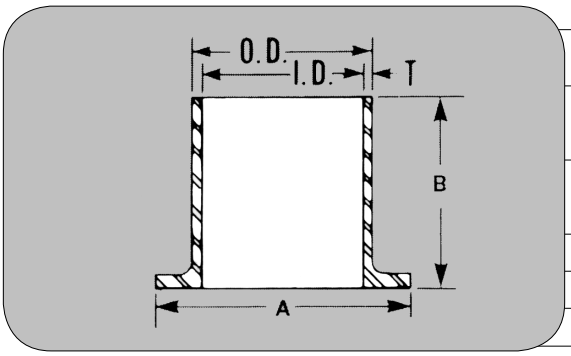

SIZE (TUBE O.D.)	O.D.	I.D.	T	A	C	STOCK NO.
1	1.000	.870	.065	2	1-5/8	3530710LS
1-1/2	1.500	1.370	.065	2-7/8	1-3/4	3530715LS
2	2.000	1.870	.065	3-5/8	1-1/2	3530720LS
2-1/2	2.500	2.370	.065	4-1/8	2	3530725LS
3	3.000	2.870	.065	5	2-1/4	3530730LS
4	4.000	3.834	.083	6-3/16	2-5/8	3530740LS
6	6.000	5.782	.109	8-1/2	3	3530760LS

22WB ADAPTER

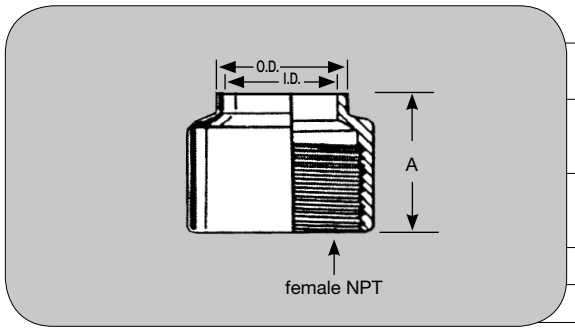

SIZE (TUBE O.D.)	O.D.	I.D.	A	STOCK NO.
1	1.00	0.870	1-3/4	3532210
1-1/2	1.50	1.370	1-3/4	3532215
2	2.00	1.870	1-3/4	3532220
2-1/2	2.50	2.370	2-1/4	3532225
3	3.00	2.870	2-1/2	3532230
4	4.00	3.834	2-5/8	3532240

31W CONCENTRIC REDUCER

SIZE (TUBE O.D.)	A	STOCK NO.
1-1/2 X 1	2	3530815-10
2 X 1	4	3530820-10
2 X 1-1/2	2	3530820-15
2-1/2 X 1	6	3530825-10
2-1/2 X 1-1/2	4	3530825-15
2-1/2 X 2	2	3530825-20
3 X 1	8	3530830-10
3 X 1-1/2	6	3530830-15
3 X 2	4	3530830-20
3 X 2-1/2	2	3530830-25
4 X 1	12	3530840-10
4 X 1-1/2	10	3530840-15
4 X 2	8	3530840-20
4 X 2-1/2	6	3530840-25
4 X 3	4	3530840-30
6 X 3	6	3530860-30
6 X 4	4	3530860-40

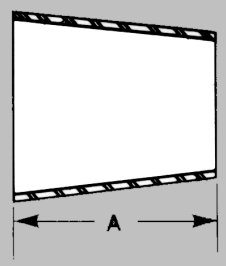

32W ECCENTRIC REDUCER

SIZE (TUBE O.D.)	A	STOCK NO.
1-1/2 X 1	2	3530915-10
2 X 1	4	3530920-10
2 X 1-1/2	2	3530920-15
2-1/2 X 1	6	3530925-10
2-1/2 X 1-1/2	4	3530925-15
2-1/2 X 2	2	3530925-20
3 X 1	8	3530930-10
3 X 1-1/2	6	3530930-15
3 X 2	4	3530930-20
3 X 2-1/2	2	3530930-25
4 X 1	12	3530940-10
4 X 1-1/2	10	3530940-15
4 X 2	8	3530940-20
4 X 2-1/2	6	3530940-25
4 X 3	4	3530940-30
6 X 3	6	3530960-30
6 X 4	4	3530960-40

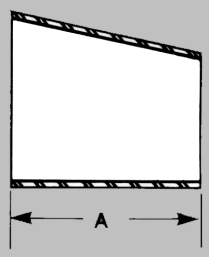

38SL BACK-UP FLANGE (Ty 304 STAINLESS)

SIZE (TUBE O.D.)	OUTSIDE DIA. A	WALL THICKNESS B	INSIDE DIA. C	BOLT CIRCLE D	NO. & DIA OF BOLT HOLE E
1	4-1/4	3/8	1.063	3-1/8	4-5/8
1-1/2	5	3/8	1.563	3-7/8	4-5/8
2	6	7/16	2.063	4-3/4	4-3/4
2-1/2	7	7/16	2.563	5-1/2	4-3/4
3	7-1/2	1/2	3.063	6	4-3/4
4	9	1/2	4.063	7-1/2	8-3/4
6	11	9/16	6.063	9-1/2	8-7/8

1/2" AND 3/4" SIZES UPON REQUEST

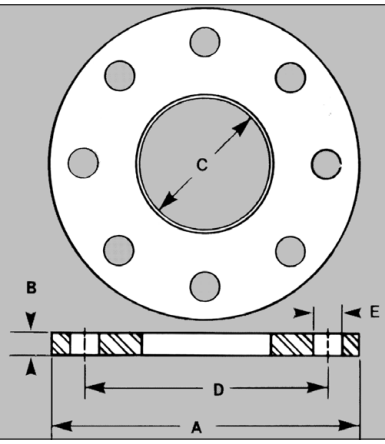

TOP LINE
PROCESS EQUIPMENT COMPANY

. . . the source for
all your product needs
in the process industries

Contact your Top Line Representative for Assistance
Office: P.O. Box 264 · Bradford, PA 16701
Plant: 21 Valley Hunt Drive · Lewis Run, PA 16738
800-458-6095
814-362-4626
Fax: 814-362-4453

PUMPS & STRAINERS- Centrifugal, Rotary Lobe, Filters and Strainers

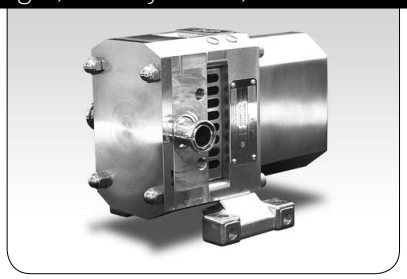

VALVES - Manual, Actuated, Diaphragm

FITTINGS - Clamp, Sanitary Butt Weld, Bevel Seat, Tube OD Buttweld, Custom, Biopharm

TUBING, GAUGES, SIGHT GLASSES, BRAIDED HOSE

www.toplineonline.com

CAT-TOD RG 408 ©Top Line 2008